CU Type:
UC_CNDO

CU Function:
U_TL69 for 35kV & 46kV,
U_TG69 for 69kV through 344kV,
U_T345 for 345kV & greater.

For correct CU:
substitute 2 for NYSEG,
3 for CMP or 4 for RG&E
in place of asterisk (U*_).

ALL CUs ARE SINGLE CIRCUIT.
FOR DOUBLE CIRCUIT, USE 2
SINGLE CIRCUIT CUs.

BILL OF MATERIAL

ITEM NO.	QTY	UOM	GLOBAL IUSA MID	CU: U*CT-TS-PJ04-01
1	3	ST	tbd *	CLAMP DUAL FOR JUMPER POST 1.00-1.40

* HUBBELL 2717243001 or MACLEAN NPH3D-18-140

BILL OF MATERIAL

ITEM NO.	QTY	UOM	GLOBAL IUSA MID	CU: U*CT-TS-PJ04-02
1	3	ST	tbd **	CLAMP DUAL FOR JUMPER POST 1.40-1.60

** HUBBELL 2717253001 or MACLEAN NPH3D-18-175

BILL OF MATERIAL

ITEM NO.	QTY	UOM	GLOBAL IUSA MID	CU: U*CT-TS-PJ04-03
1	3	ST	tbd ***	CLAMP DUAL FOR JUMPER POST 1.60-2.00

*** HUBBELL 2717263001 or MACLEAN NPH3D-18-200

Only to be used for jumper applications.

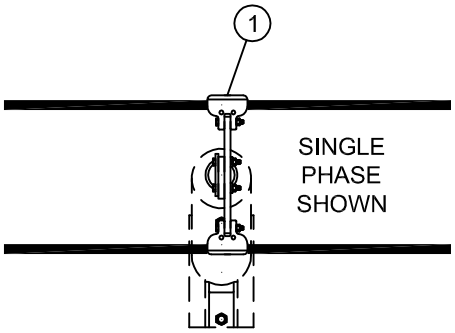

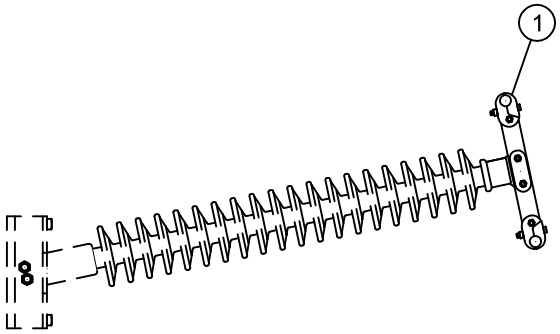

REFER TO IBERDROLA
USA TRANSMISSION
CONSTRUCTION STANDARDS
MANUAL TM2.23.TI
FOR APPROPRIATE
INSULATOR SELECTION

ASSOCIATED STANDARD:
JUMPER POST WITH BUNDLED
CONDUCTOR - DUAL CLAMP

THIS IS A COMPUTER GENERATED DRAWING - DO NOT REVISE MANUALLY

ANSI A 8-1/2" X 11"

Contact Engineering Standards - Transmission for the creation of new standards and CUs.

Drawing Scale: 3/4" = 1'-0"

IBERDROLA USA

IBERDROLA USA TRANSMISSION CONSTRUCTION STANDARDS MANUAL

TRANSMISSION SPECIFY DETAILS
BUNDLED CONDUCTOR - HORIZONTAL POST INSULATOR
JUMPER FOR DEAD END
3 DUAL JUMPER CLAMPS - NO ARMOR ROD

Drwn. By:	Date Dr.:	Checked By:	Date Ck.:	Approved By:	Date App.:	TM2.23.TS-PJ04	Revision 00	DATE / /2015	Sheet 1
L.A. Best	6/30/2015	Shepard/Becken/Hart	/ /2015	Barry R. Hart	/ /2015				

BILL OF MATERIAL for CU, CWLD, CWLD/CU, STL

ITEM NO.	QTY	UOM	GLOBAL IUSA MID	CU: U*CT-TS-SJ15-21
1	6	ST	30926142	CLAMP SUSP STL W/SCKT 16K 0.20-0.46
2	6	ST	30923932	SHACKLE ANCH 7/8 BNK 1-1/4 OPNG 60K
3	3	ST	30923944	YOKE AL CAST TRIANGLE C-0112-1 32K
4	3	ST	30923910	LINK CHAIN 5/8 STK 1 X 3-1/4 IS 40K
5	6	ST	30924092	FTTG Y-CLV BALL S HL 9-5/16 LNG 30K

BILL OF MATERIAL for CU, CWLD, CWLD/CU, STL

ITEM NO.	QTY	UOM	GLOBAL IUSA MID	CU: U*CT-TS-SJ15-22
1	6	ST	30926143	CLAMP SUSP STL W/SCKT 18K 0.30-0.70
2	6	ST	30923932	SHACKLE ANCH 7/8 BNK 1-1/4 OPNG 60K
3	3	ST	30923944	YOKE AL CAST TRIANGLE C-0112-1 32K
4	3	ST	30923910	LINK CHAIN 5/8 STK 1 X 3-1/4 IS 40K
5	6	ST	30924092	FTTG Y-CLV BALL S HL 9-5/16 LNG 30K

BILL OF MATERIAL for CU, CWLD, CWLD/CU, STL

ITEM NO.	QTY	UOM	GLOBAL IUSA MID	CU: U*CT-TS-SJ15-23
1	6	ST	30926144	CLAMP SUSP STL W/SCKT 18K 0.40-0.82
2	6	ST	30923932	SHACKLE ANCH 7/8 BNK 1-1/4 OPNG 60K
3	3	ST	30923944	YOKE AL CAST TRIANGLE C-0112-1 32K
4	3	ST	30923910	LINK CHAIN 5/8 STK 1 X 3-1/4 IS 40K
5	6	ST	30924092	FTTG Y-CLV BALL S HL 9-5/16 LNG 30K

BILL OF MATERIAL

ITEM NO.	QTY	UOM	GLOBAL IUSA MID	CU: U*CT-TS-SJ15-01
1	6	ST	30926118	CLAMP SUSP AL W/SCKT 18K 0.40-0.85
2	6	ST	30923932	SHACKLE ANCH 7/8 BNK 1-1/4 OPNG 60K
3	3	ST	30923944	YOKE AL CAST TRIANGLE C-0112-1 32K
4	3	ST	30923910	LINK CHAIN 5/8 STK 1 X 3-1/4 IS 40K
5	6	ST	30924092	FTTG Y-CLV BALL S HL 9-5/16 LNG 30K

BILL OF MATERIAL

ITEM NO.	QTY	UOM	GLOBAL IUSA MID	CU: U*CT-TS-SJ15-02
1	6	ST	30926121	CLAMP SUSP AL W/SCKT 25K 0.50-1.04
2	6	ST	30923932	SHACKLE ANCH 7/8 BNK 1-1/4 OPNG 60K
3	3	ST	30923944	YOKE AL CAST TRIANGLE C-0112-1 32K
4	3	ST	30923910	LINK CHAIN 5/8 STK 1 X 3-1/4 IS 40K
5	6	ST	30924092	FTTG Y-CLV BALL S HL 9-5/16 LNG 30K

BILL OF MATERIAL

ITEM NO.	QTY	UOM	GLOBAL IUSA MID	CU: U*CT-TS-SJ15-03
1	6	ST	30926123	CLAMP SUSP AL W/SCKT 25K 0.90-1.37
2	6	ST	30923932	SHACKLE ANCH 7/8 BNK 1-1/4 OPNG 60K
3	3	ST	30923944	YOKE AL CAST TRIANGLE C-0112-1 32K
4	3	ST	30923910	LINK CHAIN 5/8 STK 1 X 3-1/4 IS 40K
5	6	ST	30924092	FTTG Y-CLV BALL S HL 9-5/16 LNG 30K

BILL OF MATERIAL

ITEM NO.	QTY	UOM	GLOBAL IUSA MID	CU: U*CT-TS-SJ15-04
1	6	ST	30926126	CLAMP SUSP AL W/SCKT 25K 1.25-1.82
2	6	ST	30923932	SHACKLE ANCH 7/8 BNK 1-1/4 OPNG 60K
3	3	ST	30923944	YOKE AL CAST TRIANGLE C-0112-1 32K
4	3	ST	30923910	LINK CHAIN 5/8 STK 1 X 3-1/4 IS 40K
5	6	ST	30924092	FTTG Y-CLV BALL S HL 9-5/16 LNG 30K

BILL OF MATERIAL

ITEM NO.	QTY	UOM	GLOBAL IUSA MID	CU: U*CT-TS-SJ15-05
1	6	ST	30926128	CLAMP SUSP AL W/SCKT 25K 1.40-2.13
2	6	ST	30923932	SHACKLE ANCH 7/8 BNK 1-1/4 OPNG 60K
3	3	ST	30923944	YOKE AL CAST TRIANGLE C-0112-1 32K
4	3	ST	30923910	LINK CHAIN 5/8 STK 1 X 3-1/4 IS 40K
5	6	ST	30924092	FTTG Y-CLV BALL S HL 9-5/16 LNG 30K

BILL OF MATERIAL

ITEM NO.	QTY	UOM	GLOBAL IUSA MID	CU: U*CT-TS-SJ15-06
1	6	ST	30926129	CLAMP SUSP AL W/SCKT 25K 1.75-2.27
2	6	ST	30923932	SHACKLE ANCH 7/8 BNK 1-1/4 OPNG 60K
3	3	ST	30923944	YOKE AL CAST TRIANGLE C-0112-1 32K
4	3	ST	30923910	LINK CHAIN 5/8 STK 1 X 3-1/4 IS 40K
5	6	ST	30924092	FTTG Y-CLV BALL S HL 9-5/16 LNG 30K

BILL OF MATERIAL

ITEM NO.	QTY	UOM	GLOBAL IUSA MID	CU: U*CT-TS-SJ15-07
1	6	ST	30926130	CLAMP SUSP AL W/SCKT 25K 2.00-2.52
2	6	ST	30923932	SHACKLE ANCH 7/8 BNK 1-1/4 OPNG 60K
3	3	ST	30923944	YOKE AL CAST TRIANGLE C-0112-1 32K
4	3	ST	30923910	LINK CHAIN 5/8 STK 1 X 3-1/4 IS 40K
5	6	ST	30924092	FTTG Y-CLV BALL S HL 9-5/16 LNG 30K

BILL OF MATERIAL

ITEM NO.	QTY	UOM	GLOBAL IUSA MID	CU: U*CT-TS-SJ15-08
1	6	ST	30926131	CLAMP SUSP AL W/SCKT 40K 2.40-2.80
2	6	ST	30923932	SHACKLE ANCH 7/8 BNK 1-1/4 OPNG 60K
3	3	ST	30923944	YOKE AL CAST TRIANGLE C-0112-1 32K
4	3	ST	30923910	LINK CHAIN 5/8 STK 1 X 3-1/4 IS 40K
5	6	ST	30924092	FTTG Y-CLV BALL S HL 9-5/16 LNG 30K

FOR OTHER WIRE SIZES:
REFER TO TJ-01-001 FOR SUSPENSION CLAMPS.

CU Type:
UC_CNDO

IF ITEM 6 IS NOT PROVIDED WITH THE BRACED POST, ADD 6 OF MID 30923932 (ANCHOR SHACKLE) FOR SINGLE CIRCUIT OR 12 FOR DOUBLE CIRCUIT TO THE WORK ORDER COMPONENTS PAGE.

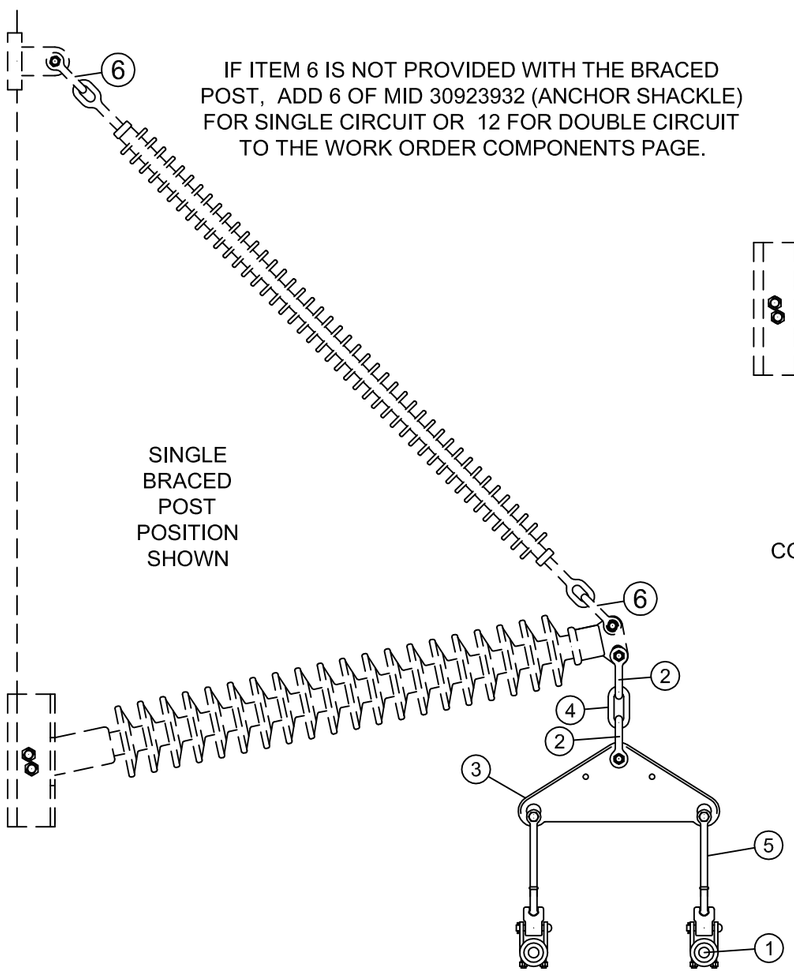

SINGLE BRACED POST POSITION SHOWN

REFER TO IBERDROLA USA TRANSMISSION CONSTRUCTION STANDARDS MANUAL TM2.23.TI FOR APPROPRIATE INSULATOR SELECTION

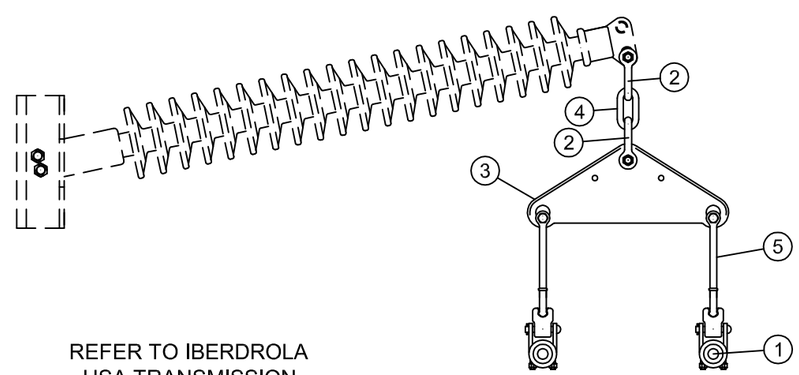

SINGLE HORIZONTAL POST LOCATION SHOWN

ALL CUs ARE SINGLE CIRCUIT.
FOR DOUBLE CIRCUIT, USE 2 SINGLE CIRCUIT CUs.

ASSOCIATED STANDARD:
JUMPER POST WITH BUNDLED CONDUCTOR IN SUSPENSION

CU Function:
U_TL69 for 35kV & 46kV, U_TG69 for 69kV through 344kV, U_T345 for 345kV & greater.

For correct CU: substitute 2 for NYSEG, 3 for CMP or 4 for RG&E in place of asterisk (U*_).

Contact Engineering Standards - Transmission for the creation of new standards and CUs.

Drawing Scale: 3/4" = 1'-0"

IBERDROLA USA

IBERDROLA USA TRANSMISSION CONSTRUCTION STANDARDS MANUAL

TRANSMISSION SPECIFY DETAILS
BUNDLED CONDUCTOR
BRACED POST OR DROP TONGUE INSULATOR
6 SUSPENSION CLAMPS AND 3 YOKES - NO ARMOR ROD

Drwn. By:	Date Dr.:	Checked By:	Date Ck.:	Approved By:	Date App.:	TM2.23.TS-SJ15	Revision 00	Date / /2015	Sheet 1
L.A. Best	2/13/2015	Shepard/Becken/Hart	/ /2015	Barry R. Hart	/ /2015				

THIS IS A COMPUTER GENERATED DRAWING - DO NOT REVISE MANUALLY

ANSI B 11" X 17"

BILL OF MATERIAL for 477 ACSR 18/1 Pelican

ITEM NO.	QTY	UOM	GLOBAL IUSA MID	CU: U*CT-TS-SJ16-IB
1	6	ST	30925819	ROD ARMR PREFRM AL 76 IN 0.783-0.814
2	6	ST	30926125	CLAMP SUSP AL W/SCKT 25K 1.10-1.62
3	6	ST	30923932	SHACKLE ANCH 7/8 BNK 1-1/4 OPNG 60K
4	3	ST	30923944	YOKE AL CAST TRIANGLE C-0112-1 32K
5	3	ST	30923910	LINK CHAIN 5/8 STK 1 X 3-1/4 IS 40K
6	6	ST	30924092	FTTG Y-CLV BALL S HL 9-5/16 LNG 30K

BILL OF MATERIAL for 795 ACSR 26/7 Drake

ITEM NO.	QTY	UOM	GLOBAL IUSA MID	CU: U*CT-TS-SJ16-IC
1	6	ST	30925807	ROD ARMR PREFRM AL 100 IN 1.099-1.139
2	6	ST	30926128	CLAMP SUSP AL W/SCKT 25K 1.40-2.13
3	6	ST	30923932	SHACKLE ANCH 7/8 BNK 1-1/4 OPNG 60K
4	3	ST	30923944	YOKE AL CAST TRIANGLE C-0112-1 32K
5	3	ST	30923910	LINK CHAIN 5/8 STK 1 X 3-1/4 IS 40K
6	6	ST	30924092	FTTG Y-CLV BALL S HL 9-5/16 LNG 30K

BILL OF MATERIAL for 1192 ACSR 45/7 Bunting

ITEM NO.	QTY	UOM	GLOBAL IUSA MID	CU: U*CT-TS-SJ16-ID
1	6	ST	30925810	ROD ARMR PREFRM AL 100 IN 1.270-1.327
2	6	ST	30926129	CLAMP SUSP AL W/SCKT 25K 1.75-2.27
3	6	ST	30923932	SHACKLE ANCH 7/8 BNK 1-1/4 OPNG 60K
4	3	ST	30923944	YOKE AL CAST TRIANGLE C-0112-1 32K
5	3	ST	30923910	LINK CHAIN 5/8 STK 1 X 3-1/4 IS 40K
6	6	ST	30924092	FTTG Y-CLV BALL S HL 9-5/16 LNG 30K

BILL OF MATERIAL for 1033.5 ACSR 45/7 Ortolan

ITEM NO.	QTY	UOM	GLOBAL IUSA MID	CU: U*CT-TS-SJ16-GJ
1	6	ST	30925809	ROD ARMR PREFRM AL 100 IN 1.209-1.269
2	6	ST	30926129	CLAMP SUSP AL W/SCKT 25K 1.75-2.27
3	6	ST	30923932	SHACKLE ANCH 7/8 BNK 1-1/4 OPNG 60K
4	3	ST	30923944	YOKE AL CAST TRIANGLE C-0112-1 32K
5	3	ST	30923910	LINK CHAIN 5/8 STK 1 X 3-1/4 IS 40K
6	6	ST	30924092	FTTG Y-CLV BALL S HL 9-5/16 LNG 30K

CU Type:
UC_CNDO

FOR OTHER WIRE SIZES:
REFER TO TJ-01-001 FOR SUSPENSION CLAMPS
AND TJ-05-001 FOR PREFORMED ARMOR RODS.

ALL CUs ARE SINGLE CIRCUIT.
FOR DOUBLE CIRCUIT, USE 2
SINGLE CIRCUIT CUs.

IF ITEM 7 IS NOT PROVIDED WITH THE BRACED POST, ADD
6 OF MID 30923932 (ANCHOR SHACKLE) FOR SINGLE
CIRCUIT OR 12 FOR DOUBLE CIRCUIT TO THE WORK
ORDER COMPONENTS PAGE.

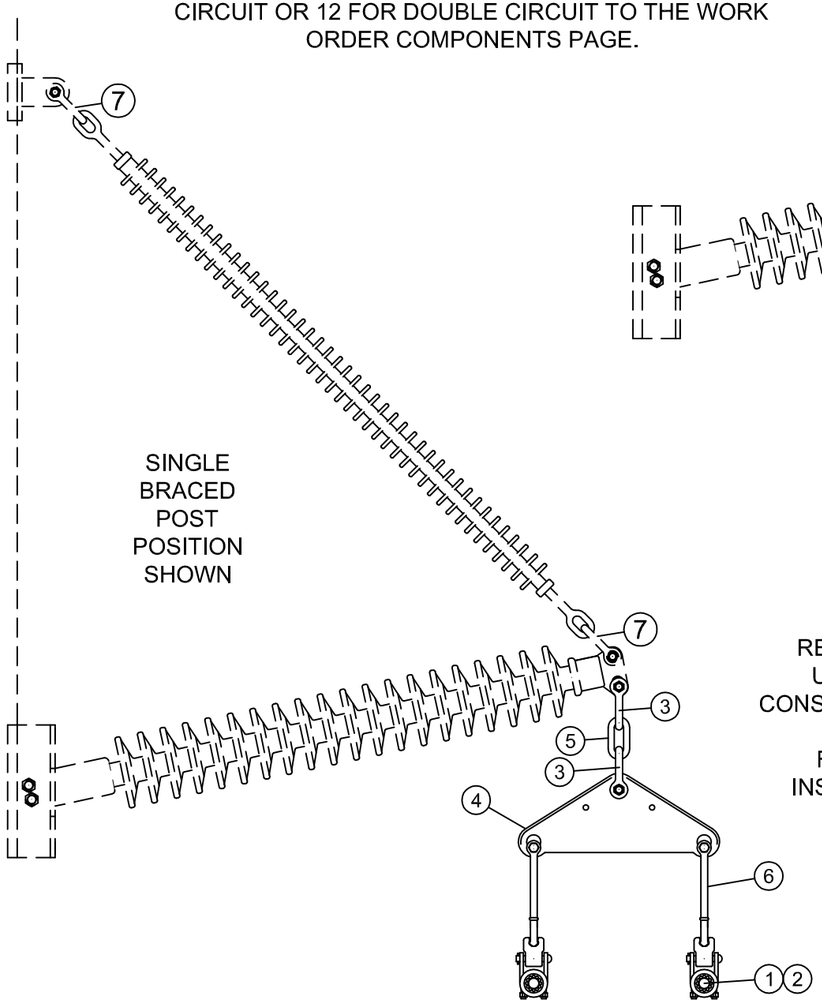

SINGLE
BRACED
POST
POSITION
SHOWN

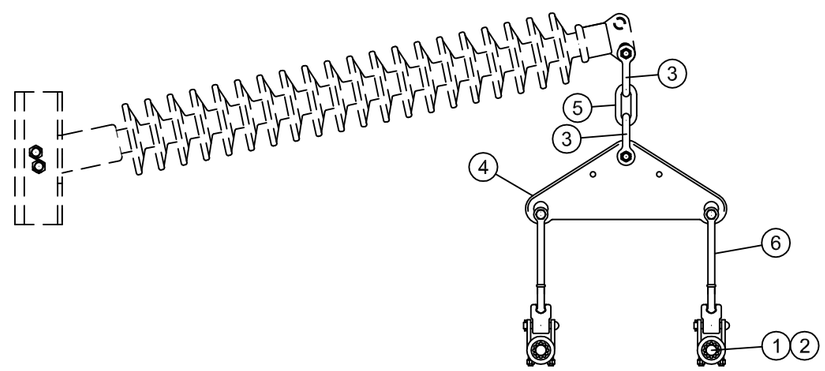

SINGLE
HORIZONTAL
POST LOCATION
SHOWN

REFER TO IBERDROLA
USA TRANSMISSION
CONSTRUCTION STANDARDS
MANUAL TM2.23.TI
FOR APPROPRIATE
INSULATOR SELECTION

ASSOCIATED STANDARD:
HORIZONTAL POST OR
BRACED POST WITH BUNDLED
CONDUCTOR IN SUSPENSION

CU Function:
U_TL69 for 35kV & 46kV, U_TG69 for 69kV through 344kV, U_T345 for 345kV & greater.

For correct CU: substitute 2 for NYSEG, 3 for CMP or 4 for RG&E in place of asterisk (U*_).

Contact Engineering Standards - Transmission for the creation of new standards and CUs.

Drawing Scale: 3/4" = 1'-0"

IBERDROLA USA

IBERDROLA USA TRANSMISSION CONSTRUCTION STANDARDS MANUAL

TRANSMISSION SPECIFY DETAILS
BUNDLED CONDUCTOR
BRACED POST OR DROP TONGUE INSULATOR
6 SUSPENSION CLAMPS - 3 YOKES - 6 SETS ARMOR ROD

Drwn. By:	Date Dr.:	Checked By:	Date Ck.:	Approved By:	Date App.:	TM2.23.TS-SJ16	Revision 00	Date / /2015	Sheet 1
L.A. Best	2/13/2015	Shepard/Becken/Hart	/ /2015	Barry R. Hart	/ /2015				

THIS IS A COMPUTER GENERATED
DRAWING - DO NOT REVISE MANUALLY

ANSI B
11" X 17"